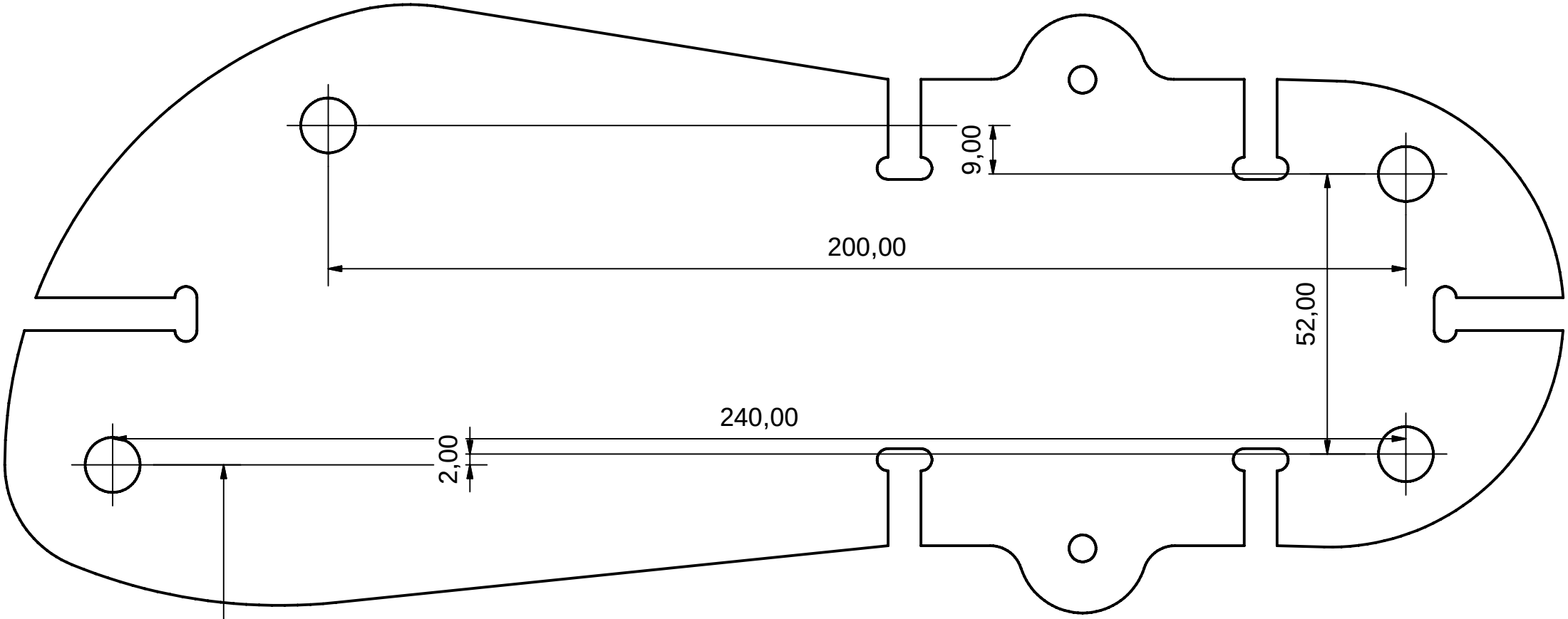

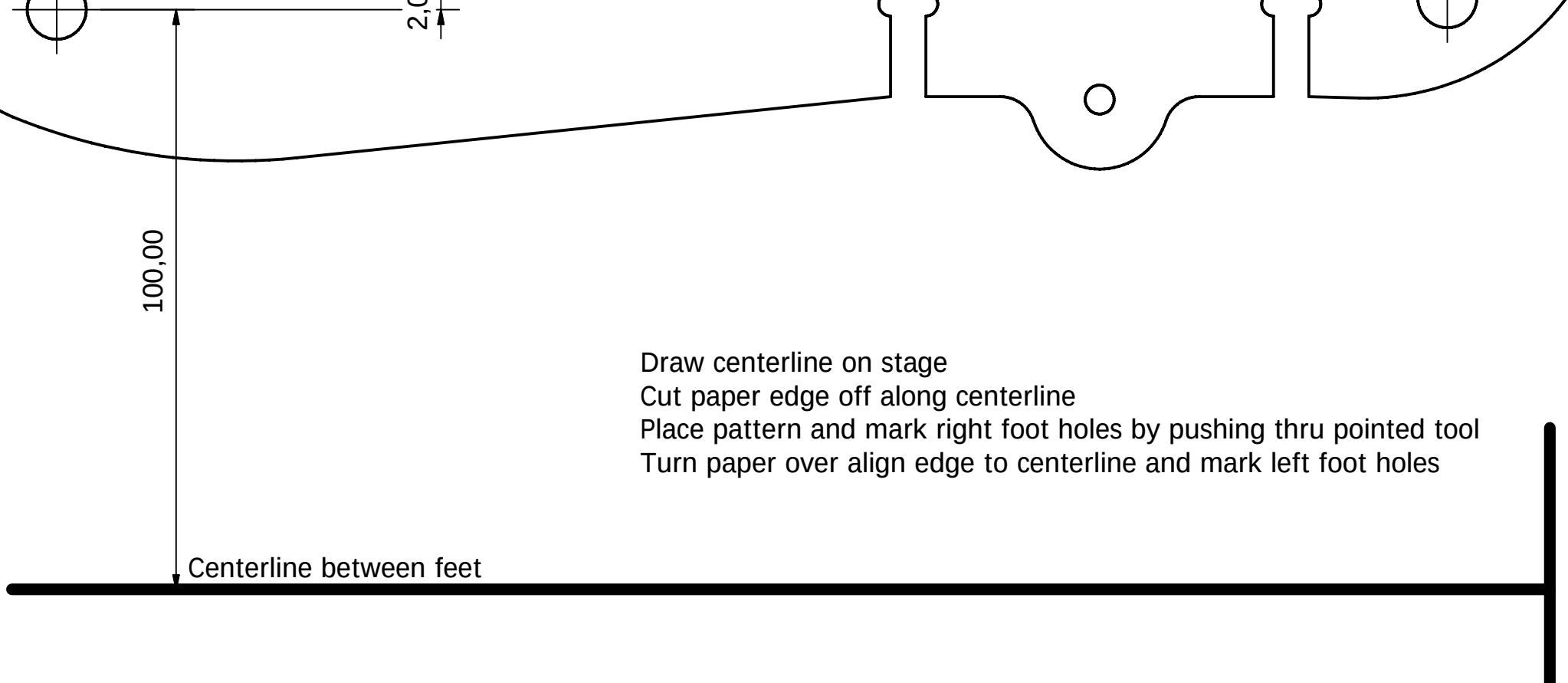

Draw centerline on stage
Cut paper edge off along centerline
Place pattern and mark right foot holes by pushing thru pointed tool
Turn paper over align edge to centerline and mark left foot holes